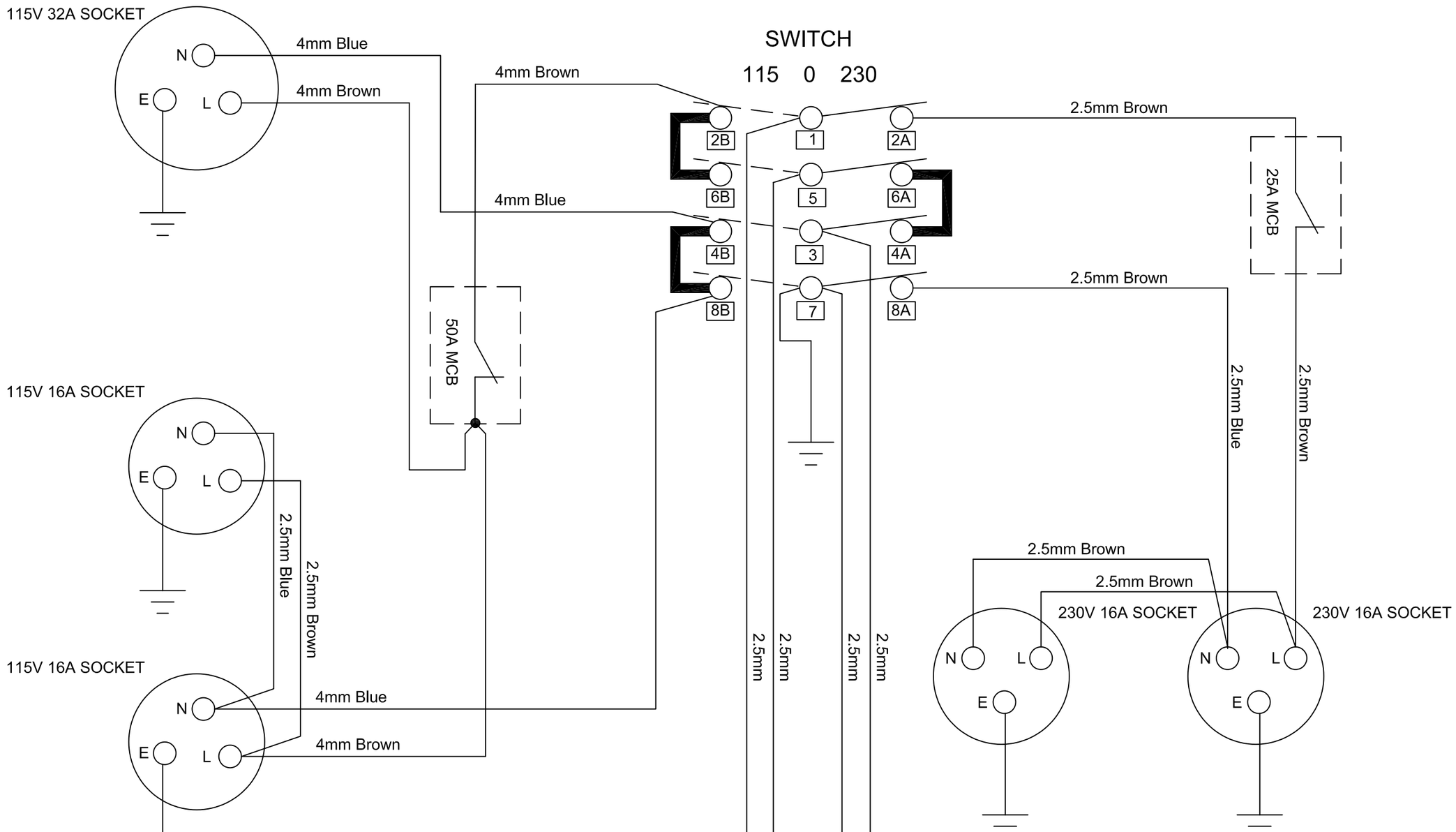

Alternator wires

Meccalte	B105	NAC	NSM	NSM M100
Red	U1	Red	Brown	Red
White	U5	Brown	White	Brown
Yellow	U2	White	Black	Blue
Green	U6	Blue	Blue	Black

STEPHILL GENERATORS
Phone 01933 677911
Fax 01933 677916

Drawing Number
SW 12022

Drawn
R Golding

DESCRIPTION
6Kva Dual voltage single pole MCBs wiring diagram

Last Number Used
N/A

Issue	Date	Revision
A	03/04/03	New drawing.
B	30/11/05	New drawing.
C	02/10/06	NSM M100 Wiring added.